BILL OF MATERIALS

ITEM	TOTAL QTY	DESCRIPTION	MATERIAL GRADE	REMARKS	WEIGHT (LBS)
	ONE	HANDRAIL – MK201A			(89)
1	LF	TS1 1/2"x1 1/2"x 1/8" x 30'-0"	A500,GR.B		65
2	LF	PRESSED C4 x 1 1/2 x 1/8 x 8'-0"	ASTM-A36		23
3	2	PL 1/4" x 1 1/2" x 0'-3 1/2"	ASTM-A36		1
	ONE	HANDRAIL – MK201B			(88)
1	LF	TS1 1/2"x1 1/2"x 1/8" x 30'-0"	A500,GR.B		65
2	LF	PRESSED C4 x 1 1/2 x 1/8 x 8'-0"	ASTM-A36		23
				TOTAL WEIGHT:	177

NOTE: LF = LINEAR FEET

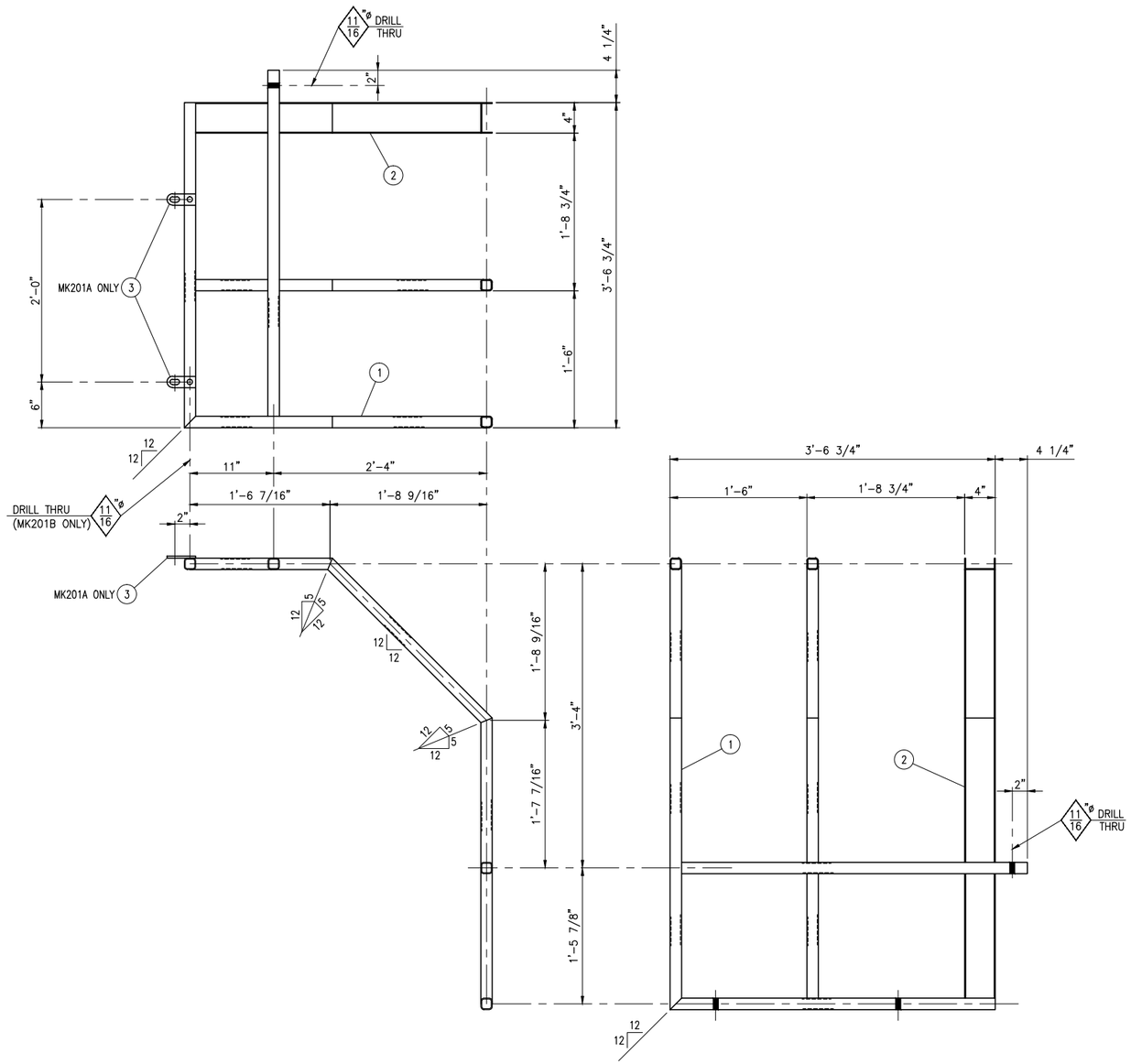

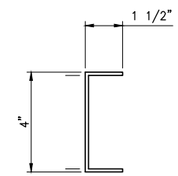

DETAIL ITEM 2

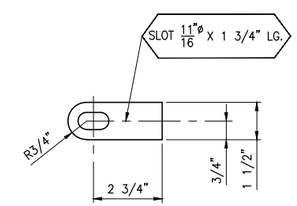

DETAIL ITEM 3

ONE ~ HANDRAIL – MK201A (AS SHOWN & NTD)

ONE ~ HANDRAIL – MK201B (OPP HAND & NTD)

GENERAL NOTES

1. UNLESS OTHERWISE SPECIFIED, ALL DRILLING RIG STRUCTURAL WELDING SHALL CONFORM TO THE AMERICAN WELDING SOCIETY AWS D1.1 STRUCTURAL WELDING CODE.
2. ALL WELDING PROCESSES ARE TO CONFORM TO QUALIFIED WELD PROCEDURES SPECIFIED ON THE DRAWING OR AGREED UPON UNDER SEPARATE DOCUMENTS.
3. ALL WELDS TO BE 3/16" FILLET MINIMUM BUT NEED NOT EXCEED THE THICKNESS OF THE THINNER PART JOINED.
4. CLEAN WELDS OF ALL SLAG AND PREPARE FOR INSPECTION AS OUTLINED IN THE AWS D1.1 STRUCTURAL WELDING CODE.

GENESIS ENGINEERING

DWG. No.: 13-030-SD-11-201

PROJ. No.: 13-030

THIS DRAWING CONTAINS JELEC PROPRIETARY AND CONFIDENTIAL INFORMATION
IT IS TRANSMITTED TO THE RECIPIENT FOR LIMITED PURPOSE ONLY
IT MAY NOT BE REPRODUCED, TRANSFERRED, OR USED IN WHOLE OR IN PART, WITHOUT THE WRITTEN CONSENT OF JELEC

REV	DATE	REVISION	ORIGIN	CHKD	APPVD
0	09/05/13	ISSUED FOR CONSTRUCTION	SCK	SK	TS

S.M.P.
JELEC
16901 PARK ROW
HOUSTON, TX. 77084
TEL: 713-977-6500
FAX: 713-977-6502

SMP5 (KENYA)

BOP ACCESS PLATFORM
HANDRAIL
DETAILS

SIZE	DWG NO.	REV
D	13-030-SD-11-201	0

SCALE 1 1/2"=1'-0" SHEET 1 OF 1